PARTS LIST					
ITEM NO.	QTY. REQD	FSCM NO.	PART OR IDENTIFYING NO.	NOMENCLATURE OR DESCRIPTION	MATERIAL SPECIFICATION

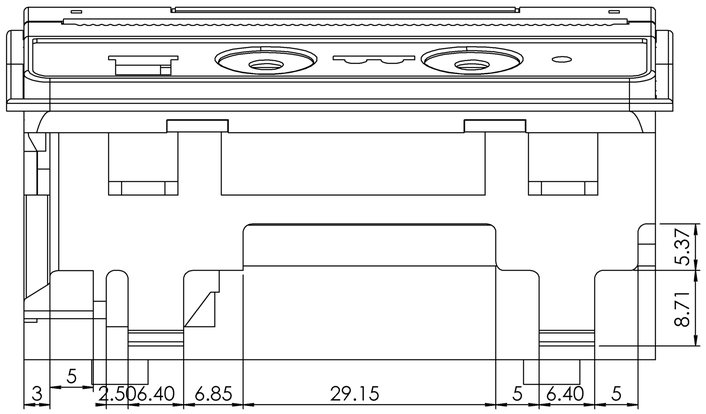

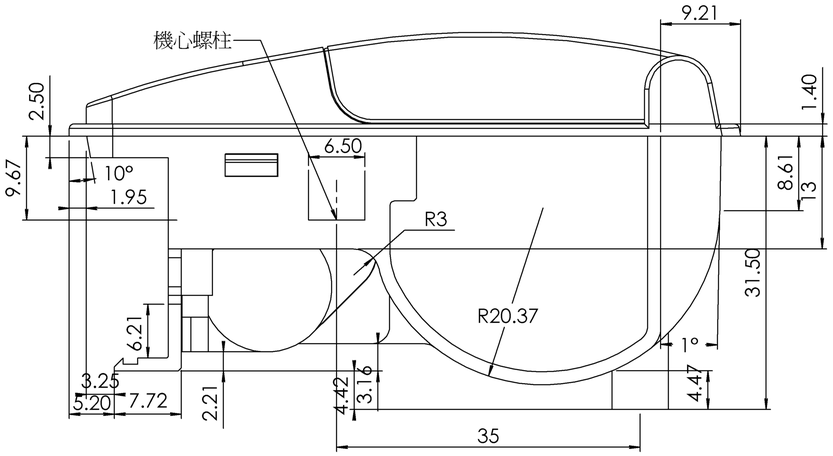

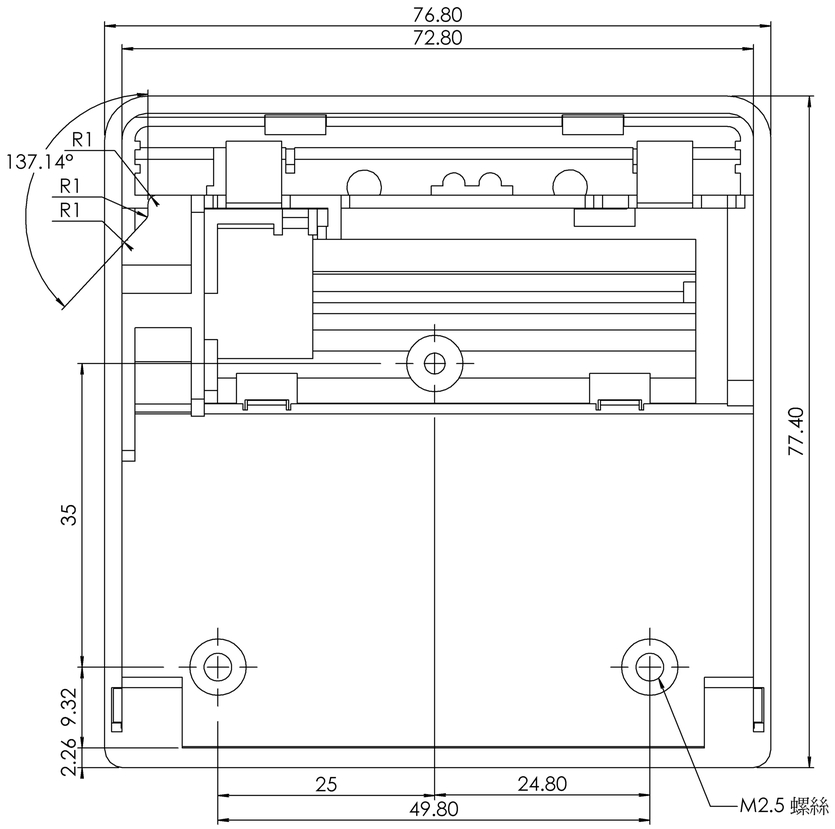

唯典科技股份有限公司
Viditec Co.
4F-1,No.432,Sec.1
Keelung Rd.,Taipei,Taiwan
台北市信義區基隆路一段432號4樓之一
E-mail:sales@viditec.com.tw
TEL:(02)2345-1836 FAX:(02)2345-1828

MODEL NO: GB		MATERIAL : ABS	
NAME PAPERHOLDER		FINISH : PANTONE	
DWG NO:		SCALE: 1:2	
PART NO:		SHEET: 1 OF 1	
UNIT: mm	PRDJ.	VER. A	SIZE: A2

	標註文字說明
A	
B	
C	
D	

UNLESS OTHERWISE SPECIFIED TOLERANCES ARE : X ±0.3 .X ±0.2 .XX ±0.1 ANGLE ±0.5°

APPROVALS	DATE
DRAW Chiang	10/29/01'
CHECK:	
APPRO:	